RIGHT SIDE COMPARTMENTS CONTAIN THE FOLLOWING:

COMPARTMENT RS1 CONTAINS:
- (1) VERTICAL COMPARTMENT DIVIDER
- PEGBOARD ON BACK WALL OF COMPARTMENT
- (1) OIL DRY HOPPER
- (1) STD DEPTH ADJ SHELF
- (1) 15/20A,120V DUPLEX RECEPTACE
- (2) FLOOR MOUNTED TRAYS WITH TOOLBOARDS

COMPARTMENT RS2 CONTAINS:
- (1) 6-SLOT STORAGE RACK
- (1) STD DEPTH ADJ SHELF
- (1) ROLL-OUT VINYL FLAP
- (1) VERTICAL COMPARTMENT DIVIDER
- (1) 15/20A,120V DUPLEX RECEPTACE
-

COMPARTMENT RS3 CONTAINS:
- (1) ROLL-OUT VINYL FLAP
- (3) VERTICAL COMPARTMENT DIVIDERS
- (1) STD DEPTH ADJ SHELF
- (1) 15/20A,120V DUPLEX RECEPTACE

COMPARTMENT RS4 CONTAINS:
- PEGBOARD ON BACK WALL OF COMPARTMENT
- (4) STD DEPTH ADJ SHELVES
- (1) VERTICAL COMPARTMENT DIVIDER
- (2) FLOOR MOUNTED TRAYS WITH TOOLBOARDS
- (1) 15/20A,120V DUPLEX RECEPTACE
- (5) POLY TOOL BOXES
-

COMPARTMENT RS5 CONTAINS:
- (1) RACK FOR 4 EXTINGUISHERS
- (3) STD DEPTH ADJ SLIDE OUT TRAYS
- (2) 15/20A,120V DUPLEX RECEPTACEs
-
-
-

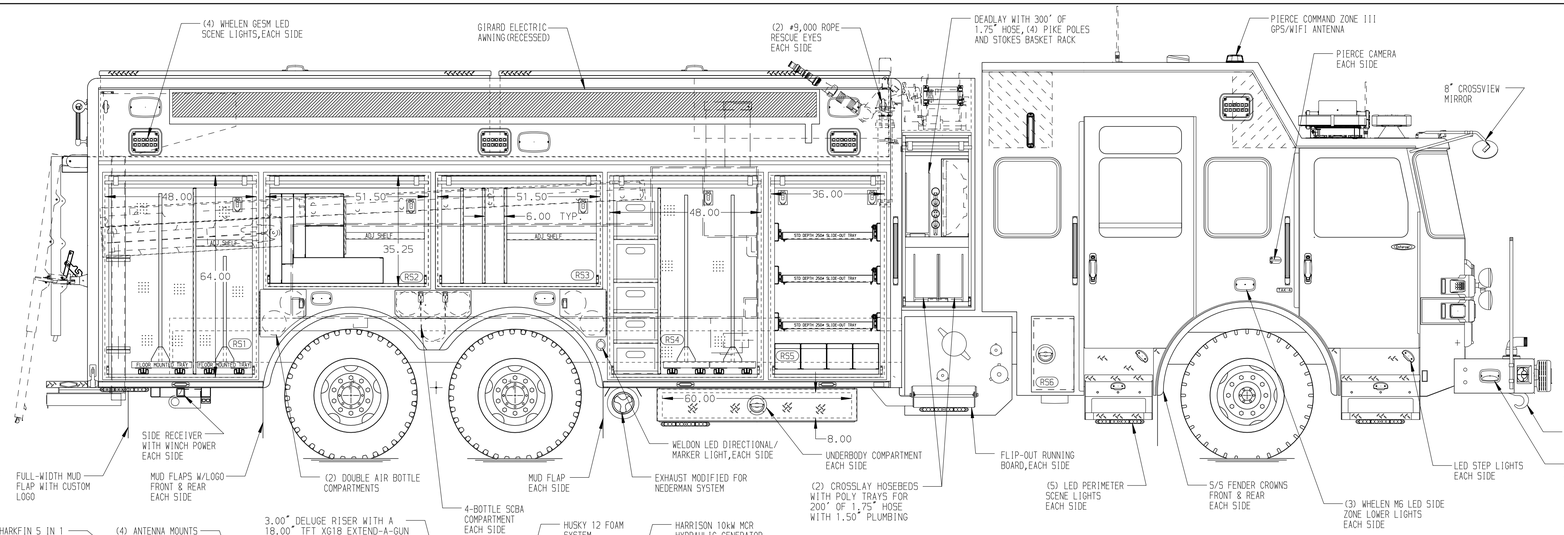

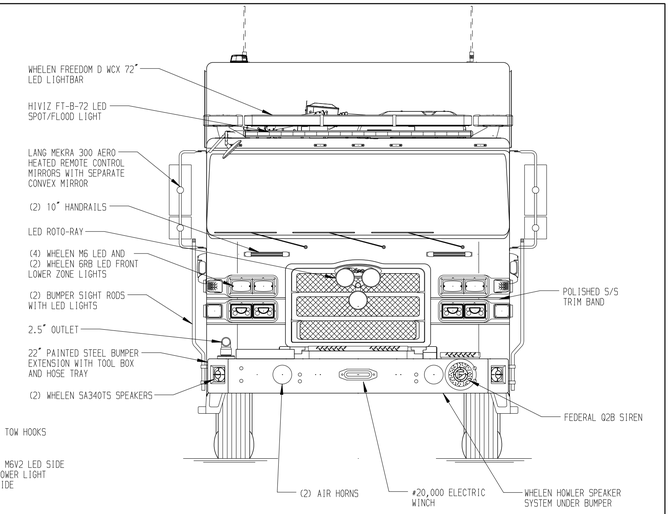

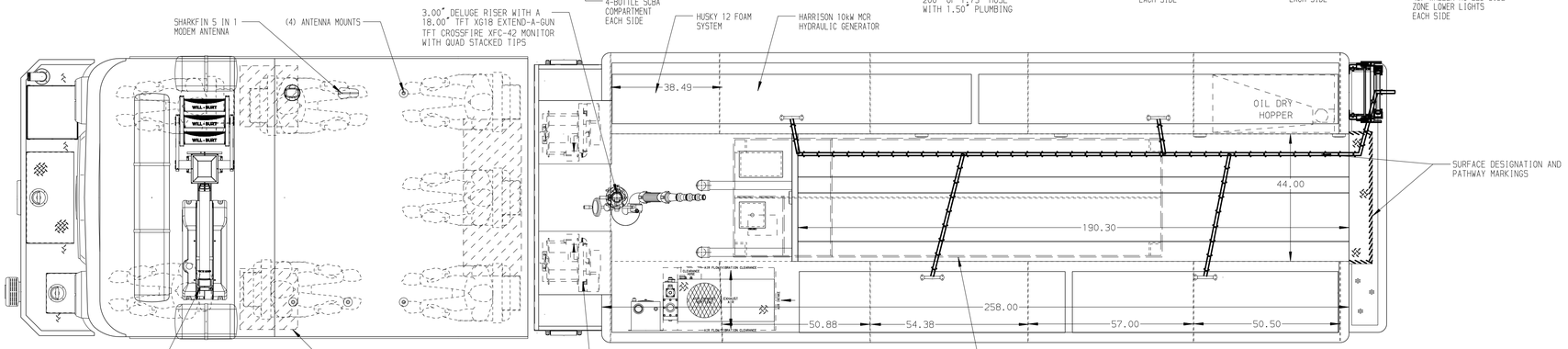

REAR COMPARTMENT CONTAINS THE FOLLOWING:

COMPARTMENT B1 CONTAINS:
- (1) FLOOR MOUNTED TRAY
- (1) 56"DP ADJ SLIDE OUT TRAY
- (1) RACK FOR THE FOLLOWING:
  - (1) 24' 2-SECTION LADDER
  - (1) 14' ROOF LADDER
  - (1) 10' FOLDING LADDER
  - (1) LITTLE GIANT LADDER
  - (1) AIR BAG RACK SLOT
  - (4) STORAGE TUBES
  - (3) PIKE POLES
- (1) 15/20A,120V DUPLEX RECEPTACE
-

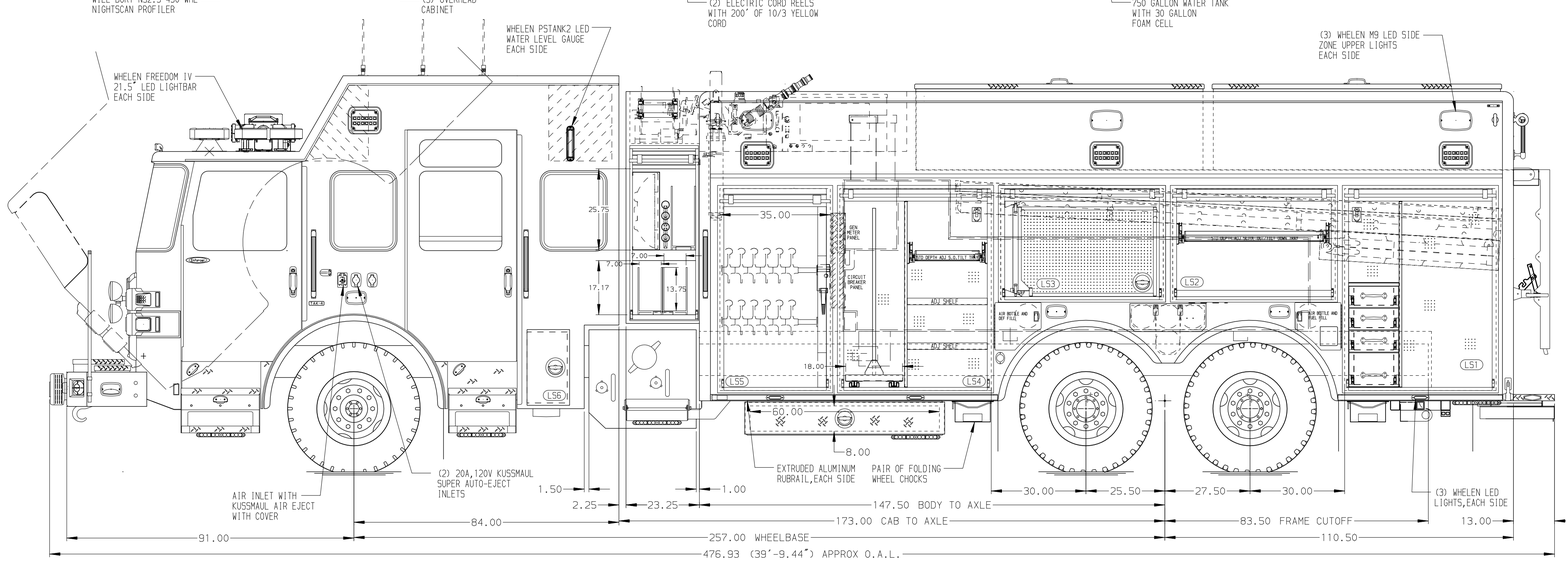

LEFT SIDE COMPARTMENTS CONTAIN THE FOLLOWING:

COMPARTMENT LS1 CONTAINS:
- PEGBOARD ON BACK WALL OF COMPARTMENT
- (1) 4-DRAWER TOOL CABINET
- (1) 15/20A,120V DUPLEX RECEPTACE
- (1) VERTICAL COMPARTMENT DIVIDER
-
-

COMPARTMENT LS2 CONTAINS:
- (1) POLY TOOL BOX
- (1) STD DEPTH ADJ SLIDE OUT/TILT TRAY
- (1) ROLL-OUT VINYL FLAP
-

COMPARTMENT LS3 CONTAINS:
- PEGBOARD ON BACK WALL OF COMPARTMENT
- (2) SWING OUT TOOLBOARDS
- (1) ROLL-OUT VINYL FLAP
-

COMPARTMENT LS4 CONTAINS:
- PEGBOARD ON BACK WALL OF COMPARTMENT
- (1) VERTICAL COMPARTMENT DIVIDER
- (2) STD DEPTH ADJ SHELVES
- (1) CIRCUIT BREAKER PANEL
- (1) GENERATOR METER PANEL
- (1) FLOOR MOUNTED TRAY WITH TOOLBOARD
- (1) STD DEPTH ADJ SLIDE OUT/TILT TRAY
- (1) 15/20A,120V DUPLEX RECEPTACE
-

COMPARTMENT LS5 CONTAINS:
- (1) LIGHT TOWER CONTROLLER
- (1) RECESSED PARTITION
-
-
-
-

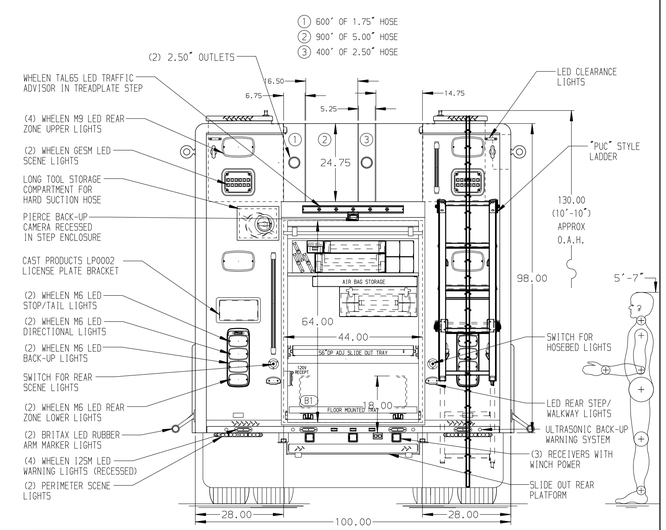

NOTE

DIMENSIONS SHOWN ARE APPROXIMATE AND ARE SUBJECT TO MINOR DEVIATIONS AS MAY OCCUR OR BE NECESSARY IN CONSTRUCTION.
MINOR DETAILS NOT SHOWN.

NOTES:
1. PIERCE 1500 GPM PUC STYLE WATER PUMP
2. ONSPOT AUTOMATIC TIRE CHAINS
3. WARN #10,000 PORTABLE RECEIVER STYLE WINCH
4. BRUSHED S/S SCUFFPLATES ON CAB AND CREW CAB DOORS
5. FLOOR IN CAB AND CREW CAB TO BE ALUMINUM TREADPLATE
6. KUSSMAUL 1200 CHARGER LOCATED BEHIND THE DRIVER'S SEAT
7. #9,000 RECEIVER STYLE ROPE ANCHOR
8. S/S GUARDS ON ALL BODY ROLL-UP DOORS
9. PULL STRAPS ON ALL BODY ROLL-UP DOORS
10. PIERCE LED LIGHTS LOCATED IN ALL BODY AND HATCH COMPARTMENTS
11. DRI-DECK MATTING ON FLOORS IN COMPARTMENTS PER ORDER
12. DRI-DECK MATTING ON ALL COMPARTMENT SHELVES AND TRAYS
13. BATTERY CHARGE INDICATOR LOCATED ON DRIVER'S SEAT RISER
14. (1) 15/20A,120V DUPLEX RECEPTACLE OVER DRIVER'S SIDE FORWARD FACING CREW CAB SEAT
15. (1) 15/20A,120V 6-PLACE RECEPTACLE STRIP BEHIND OFFICER'S SEAT

SIDE ROLL & FRONTAL IMPACT PROTECTION

CLEAR DOOR WIDTH KEY	
AMDOR ROLL UP DOORS:	-2 1/4"
GORTITE ROLL UP DOORS:	-2 1/2"
PIERCE DOUBLE LAP DOORS:	-4 1/4"
PIERCE LIFT-UP LAP DOORS:	-1 1/2"
(EX: 60"F-F - 2 1/4" = 57 3/4" CLEAR) (F-F)= FRAME TO FRAME	

REV	DATE	BY	CH
1	20FEB24	DHE	AZU
2	21DEC23	DHE	AZU
3	100CT23	DHE	AZU

CHASSIS DATA	
MAKE	PIERCE
MODEL	ENFR8424
DWG NO.	38702AD

Pierce MANUFACTURING INC.

TITLE: HEAVY DUTY RESCUE
RESCUE PUC W/750 GAL WATER TANK 30 GAL FOAM CELL

FOR: TALLMAN FIRE DISTRICT
BID #573 JEREMY COHAN

JOB NO.	38702
SCALE 1:24	DATE
DRAWN BY DHE	22AUG23
CHECKED BY AZU	29AUG23
SHEET SIZE D	SHEET NO. 1 OF 1

View File Created 22-FEB-2024 14:45:51